Issue No.1 FREE!

THE RAS REPORT

26 July, 2020 Literal Communist Propaganda

All Amerikan Freikorps

Written by RAS Cadre

In 1918-19 the defeated German state was at a tipping point. Long the heart of a powerful and advanced worker's movement, the failure of its armies during the Inter-Imperialist War [1] divided all of Germany into two camps—the internationalists and the chauvinists. Even supposed socialists fractured along these lines. The real left remained committed to international revolution and revolutionary defeatism.

The Sozialdemokraten took control of the government in the wake of the war and endorsed a campaign of capital reforms to "save" Germany. The left was split into two camps along these lines, led respectively by the KPD (Kommunistische Partei Deutschlands) and the SPD (Sozialdemokratische Partei Deutschlands). The KPD had initially split with the SPD during the war over the question of revolutionary defeatism. The KPD endorsed an anti-war, pro-defeatist stance—to "turn the imperial war into a revolutionary war." The SPD endorsed German chauvinism.

But, while the dangerous SPD front took command of the government in the name of the petit-bourgeoisie, another force was growing. The counter-revolutionaries of the far right were gathering strength. These were the bourgeoisie and their lackeys. The former German Army was forcibly disbanded by the Allied powers at the close of the war; these ex-military men became the core of the bourgeois forces, growing within the social-democratic state and the Weimar Republic. "[In 1919] the Nazi revolution was already fully formed and potent." [2]

The form this consolidation took was the Freikorps, the hated Free Corps. These were paramilitary units with a long history in the German and Prussian state. After the Imperialist War, veterans joined them en masse and found refuge and companionship among those who had fought on the line against the other imperial powers. The suppression of the military by the Allies shunted veterans into paramilitary militias.

The Freikorps were wielded by the Weimar government to combat the growing left tendencies within Germany that wanted to bring about the overthrow of German capital. In 1919 they executed the revolutionary leadership of the KPD at the command of Gustav Noske. Rosa Luxemburg, Karl Leibknecht, and hundreds of other revolutionary martyrs were shot to death at the orders of the Sozialdemokrat Gustav Noske. The Freikorps then transformed, wholesale, into the stormtroopers of the Nazi Third Reich. Direct transfer of membership from a Freikorps unit to the new Nazi Shutzstaffel and Sturmabteilung was the rule, rather than the exception. The Freikorps units actually surrendered their flags to the SS and SA units as they transferred membership.

***

Changing Guard

In mid-July of this year, the US Empire unleashed its own Freikorps in Portland, Oregon. These troops consist of a multi-agency effort employed by President Trump, led by Federal Protective Services, but staffed primarily of Department of Homeland Security and Customs and Border Patrol agents. It has been given the abbreviation PACT (Protect American Communities Taskforce). In 2017 CBP had 59,000 employees. They do not have any public numbers currently available, but under Trump they have been ordered to hired at least 15,000 new "frontline" employees, which we may assume are patrol agents as well as support for deportation.

CBP employs a large number of white nationalists, and their union endorsed a white nationalist film (Killing Free Speech). [3] Current and former agents manage white nationalist Facebook pages, and exchange jokes about beating detainees. These CBP agents are no different from the Freikorps veterans, and are being deployed in a markedly similar way. They are ideologically motivated reactionaries who have a high degree of loyalty to the US fuhrerprinzip of centralized authority. They are an executive agency who answer essentially to the Department of Justice and the President alone.

CBP has a preference for hiring veterans. Former military reportedly compose one-third of the current Border Patrol staff. [4] The US military is riddled with white nationalism. 36% of active duty troops have reported witnessing white nationalism exhibited by other members personally. We know for a fact that neo-Nazis and white nationalists recruit extensively throughout the armed forces. These extreme reactionaries are a huge faction in the already right-reactionary armed forces of the Empire. Military service works as a rightward lure on petit-bourgeois and bourgeois reactionaries that are already inclined to flirt with fascism.

"Communists and anarchists have once again become the focus of repression."

Attorney General William Barr has issued a number of anti-marxist and anti-anarchist statements, indicating that the Department of Justice is now targeting leftists. The State Department is gearing up for war with the People's Republic of China and specifically mentioned the CPC's Marxism-Leninism as a reason to sanction the PRC and potentially go to war with them. Indeed, the State Department is posturing for war footing, moving ships into Asia and publicly announcing the US intention to contest the territorial waters of the South China Sea. DHS released a statement indicating that they "won't stand idly by while violent anarchists and rioters seek not only to vandalize and destroy symbols of our nation, but to disrupt law and order and sow chaos in our communities."

Communists and anarchists have once again become the focus of repression. Customs and Border Patrol is an ideologically white nationalist agency that touts itself as "one of the largest law enforcement agencies in the world." The Freikorps are here again, responding to a left-ward movement. The protests that continue to wrack the country will not go away until they have been crushed, or until there is some change in the material conditions of the colonized subjects of this empire.

***

The protests can be seen in four major developments or phases. The first phase was the spontaneous insurrection surrounding the death of George Floyd in Minneapolis and was characterized by a mass movement of property damage and violence to bring the attention of the state to bear. The state responded in the second phase with massive police presence and repression. The counter-revolutionary forces were deployed across the country with the mission of controlling and crushing the revolt.

It was the national guard which was primarily deployed during this second phase of the protest. The national guard has a markedly different character from the police force and the US army. It is comprised of locals who live in the state and communities they were deployed against, and who are normally civilians in every day life. They are not exposed to the same degree of continuous propagandizing as the regular army and police forces.

Some commentators have suggested that, as a result, the National Guard refused to suppress these riots. There is no evidence that this is the case. Rather, the evidence suggests that the National Guard was withdrawn to preserve its readiness as a mass number of COVID positive cases surfaced in the days after its deployment.

This began the third phase of the protests: the anti-symbolism phase. The contradictions dulled as a result of the government troop withdrawal. The organic strategy that developed as a result was to attack racist and colo-

1. What the capitalist powers call World War One.
2. Haffner, Defying Hitler (2000), 34.
3. https://theintercept.com/2018/10/23/border-patrol-union-killing-free-speech-video/
4. https://www.cbp.gov/careers/veterans

nial symbols. This has been designed not to draw a similar government response and has so far kept the majority of liberals on the side of the protests. However, economic disruption has been minimized.

The great majority of the country was in phase three when PACT was deployed. Its deployment marks the beginning of a fourth phase. This is an escalation of the struggle. In each case so far, government de-escalation was answered by a dulling of the contradictions, and an escalation by their sharpening.

It is likely that this deployment will become nationwide or may be nationwide by the time this article sees print. Wherever PACT is deployed, the intensity of the struggle will increase and thus the protestors will move from attacking symbols to economic disruption.

This would be a fifth phase in the protests, and signal a general sharpening of the contradictions throughout US society. Organic organization will continue and develop as a result, and the movement will continue to consolidate under radical banners. Direct assaults on government property should be anticipated, but elevated Freikorps violence will follow. These unmarked vans and snatch-and-grabs will become commonplace for months going forward, primarily in the urban centers were the protests are strongest and their leadership most advanced. If the haphazard plan of the various police forces and intelligence agencies could lead to the disappearance and death of many of the BLM leaders within months of the Ferguson protests, we must anticipate the PACT targeting will do all this with frightening speed and clarity, organized as it is for precisely that purpose.

The CBP and PACT are our enemies. They should be denied at every turn, and strategies must be developed to counter their fascistic tendencies. Their names should be known and circulated. They have informed us they will not put their names on their garments for fear their families would be targets of reprisals. They don't want to be known.

We will find them, we will know them, and we will fight them.

Revolutionary Poetry

Written by RAS Cadre

Vitalize

I hear the trickle in of morning news and song
into my dreams
(and for a second)
I have sprouted up from some great soil—
spastic as a spider plant,
arms stretched out like the ferns
basking in the fervor of sun adulation (some happy gecko)
as I walk down rows of red of gold
crying this! is the way! and ghosts agree *đồng chí*
This is the better way.
Nursed back to health,
breathing every day, the great diaphragm of the sky squeezes
and releases—
this is the better way.
The obliteration that sickness cut around
with the precision of a surgeon,
unfolded void, I say "thank you" and "this is the better way."
This is the better way as chains rattle across the Pacific like some sort of
signal as if to say who is there? what is this?
It doesn't take much, but you have to listen. Get low touch the vibrations
telling you to feel true! independence! and liberty!
and what is rarely felt
our hearts beating in harmony — our happiness.
And I taste the kumquat
after it falls from the limb
and drop it that tart
and picked up by a field mouse.
It is the size of his head!

Protest Report—Portland, Oregon

Written by RAS Cadre

Portland, Oregon has a global reputation for riotous protesting, but since the aftermath of George Floyd's murder by Minneapolis police on May 25th, the city has reached unprecedented levels of unrest. This period, known by radicals as the June Uprising, has led to the radicalization

of many portlanders who had never previously experienced the horrors of police brutality themselves. To make matters worse the violence of the Portland Police Bureau seems to have created its own gravity- drawing nightly more protestors who seek to survive the gauntlet of tear gassing, rubber bullets and the most dangerous sound weapon in Amerika, the LRAD sonic canon.

Each night, newly hatched protestors—led by an array of groups, experienced riot medics, and self ordained independent journalists who've donned PRESS stickers—clash head on with the most violent police department in the nation. [1]

This torrent of police brutality follows a pattern. Protestors gather on the east side of Portland, march across one of the many bridges, chant for a few hours in front of the Portland Justice Center (a facility which operates as temporary holding for individuals not yet convicted of a crime,) and then get abruptly divided by riot police into smaller, easier to handle groups across downtown Portland. From there they often regroup, march back to the Justice Center and the process repeats itself. Numerous protestors are injured, often severely, on a nightly basis and this cycle seems to be unendingly perpetuating itself.

To be absolutely clear: this is a good sign. The protestors of Portland are consistently highlighting the voices of people of color, especially Black organizers, in a way that the overwhelmingly white city has failed to in the past.

That isn't to say there aren't liberal defectors among us. The organization Rose City Justice is a liberal group that clearly seeks to undermine the vigilance of nightly and riotous protesting. They play videos on projectors of the phrase "Black Lives Matter," the letters of which are composed of the American Flag, they march protestors

away from centers of action, weakening otherwise massive gatherings, and they have been called out by name by Black organizers on the ground.

The militant protesters gathering every night are ruthlessly brutalized by PPB, and as if the cruelty of Portland Police wasn't enough on their own, President Trump sent in federal officers to aid their efforts after he called Portland "totally out of control." These federal officers went on to seriously injure one protestor and have ignited a justice department investigation into their handling of the events.

Where the police seem to be repeating the same patterns, the protests themselves have evolved. Starting in late June, there was a movement of activity north toward the Police Association building, which is significant because it houses their union, the official legal arm of the Police, which effectively protects them from all litigation that might have negative impacts on their operation. These operations are, of course, the harassment and murder of people of color. This, along with protecting private property, has always, and will always be the function of Amerikan police.

Another significant event which led to the continuation of the uprising here in Portland was the murder of Dominique Dunn, who was attacked and killed by white supremacists in SW Portland just outside of a strip club, on July 9th. While an arrest has since been made for his murder, it certainly stoked the flame of righteous anger in the city. The following protests continued to be focused on the police union building and the Justice Center in tandem.

On July 16th the Secretary for Homeland Security, Chad Wolf, arrived in Portland after saying "the city of Portland has been under siege for 47 straight days by a violent mob while local political leaders refuse to restore order to protect their city." The federal officers have since been

1. https://846policebrutality.com
2. https://www.opb.org/news/article/police-violence-portland-protest-federal-officers/#.XxRY_L6Rw9c.twitter

reported by Oregon Public Broadcasting to be kidnapping protesters at random in unmarked rental cars and disappearing them to an unknown location for an unknown period of time. Although they were shortly thereafter released from detainment, the circumstances of their captures remain troubling nevertheless. President Trump has also announced the plan to send federal agents to numerous cities across the country.

Since 2010 Portland Police have killed 28 people, and not a single officer has been subject to criminal charges for their actions.

Portland is over 8 weeks into protesting and not likely to stop any time soon.

God Damn Amerikkka Protest Speeches July 6, 2020

Written by The Black Revolutionary Collective, and RAS Cadre

Speaker 1

Folks, it's good to see you all out here today. It's good to see people still angry, still pushing back against the corrupt machinations of the carceral capitalist state. The media, the television stations may have moved on in an attempt to ignore the righteous fury of the people in the streets demanding change, but that cannot stop what has begun. I look around today and I see a group of people unwilling to simply accept the scraps that the rich and powerful allow to fall off the table. I see a group of people who know we cannot simply wait for change to come, we must bring it ourselves.

I am glad to be here amongst you all. I represent the Party for Reclamation and Survival, and we are proud to support and promote this event planned by the Connecticut Black Revolutionary Collective. It's good to be out here today on this July 6th, two days after an important "holiday." Which in case you didn't know, was July 4th, known FALSELY as independence

day. I am here to tell you, as you might know, that is nothing but a LIE.

Nearly 250 years ago, a group of white, landed bourgeois sat in a room together in Philadelphia to formally separate themselves from the colonizing nation that had enabled them to steal the land they now called their own. With a pen stroke, they prepared the transfer ownership of the land from one evil colonizing empire to a new one born from their own ambitions, and built on the blood and bones of enslaved, colonized, and exploited peoples. However they were not open with this, instead they crafted a lie. A promise of freedom and opportunity. A promise of "independence". They wrote: "We hold these truths to be self-evident, that all men are created equal, that they are endowed by their Creator with certain unalienable Rights, that among these are Life, Liberty and the pursuit of Happiness.That to secure these rights, Governments are instituted among Men, deriving their just powers from the consent of the governed."

These words mark the beginning of the country, and they mark the longest and most pernicious lie in its history. The principal author of these words wrote them while the children he had forced upon his enslaved mistress toiled in bondage at his estate. While his fortune was created by the forced unpaid labor of slaves working stolen Monacan land. The founders of this goddamn nation claimed all men were created equal. That all people deserved Liberty. They promise independence. Freedom.

But I ask you, and I want you to answer, were the people free? (no)

"We are at the precipice of a great change in the world."

Were Black folks working the land for the profits of the rich free? (no)

Were indigenous people free? (no)

Were the workers free? (no)

Were women free? (no)

Were LGBT + folks free? (no)

And now almost 250 years later, has there been real change? Are our LGBT comrades, our trans comrades, free? (no)

Are women free? (no)

Are the workers free? (no)

Are the indigenous peoples of this land free? (no)

Are our Black comrades free in the united states of America today?

(NO)

They are not free. We are not free. As long as this corrupt nation exists as it does today we can never be free. Their cops still beat people in protection of property. Their troops still invade lands in search of colonial resources. Workers still are forced to mortgage their labor to survive in this capitalist hellscape. Independence day, like the conceit of this freedom, is an empty

promise. A lie. But is a lie we will not and have not taken without protest.

We are at the precipice of a great change in the world. This nation, built on the blood and bones of the enslaved, colonized, oppressed, and exploited, teeters on the brink of rapid and necessary change. There is an active and persistent movement to dismantle the systems of oppression this goddamn country has created. There is a revolutionary will for radical change, not merely waiting for it to arrive on its own. I am proud to be here amongst you all, I am proud to stand up here and be part of this moment. We are fortunate to have some great people speaking today. We have a wide group of people here, and I can't wait to hear from folks. Let's hear it again for our comrades in the Black Revolutionary Collective, and I thank you all for being here today.

Speaker 2

I'd like to dedicate my remarks as a show of solidarity to our siblings in Yemen, our siblings in Palestine, and our siblings in the Philippines. In the midst of the struggle occurring in these so-called United States, it's easy and understandable to lose sight of the struggles being waged abroad. This is not a glitch— not a personal fault of our own— but a feature of our global economic political system, which functions using the separation and atomization from fellow victims of capitalism, imperialism, and white supremacy.

For those who don't know, Yemen is currently mired in a war waged by Saudi Arabia and funded by the United States of America. As a direct result of this war, nearly 100,000 Yemenis have died, more than one-tenth of whom are civilians. This does not include the 85,000 plus civilians who have died due to famine from the effects of nearly endless bombing campaigns from drones built and funded by the US Department of Defense. We have yet to account for the many thousands of deaths that will occur due to the widespread demolition of Yemeni infrastructure, including schools, hospitals, and other care facilities. What's more, is that up to 18 million Yemeni civilians are at risk of starvation due to the murderous Saudi blockade of food and critical resources.

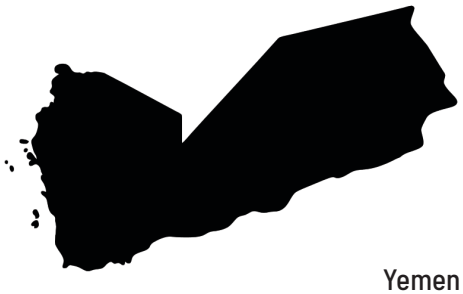

Yemen

As we've mentioned, the genocide of Yemenis has been co-signed by the US Government, including defense contractors such as Boeing, Lockheed Martin, and Raytheon, who have amassed profits exceeding a total of $30 BILLION from selling weapons to the slaughterers of our Yemeni Comrades.

That is enough money to end world hunger next year. That is enough to build 3,750,000 clean water wells around the world. That is enough to rebuild cities destroyed by redlining, overpricing, and other forms of systemic racism and white supremacy in the United States.

Repeat after me: Solidarity with Yemen.

And yet a transaction between world superpowers that could be for the common health and well-being of our fellow human is spent on murder.

As we march, as we cry for justice, what is left of our Palestinian sibling's sovereign land is being annexed by the far-right Israeli government. With the full support of the imperialist United States, the Israeli government will continue to murder, suppress, and subject Palestinians to apartheid conditions the likes of which we could see in South Africa 25 years ago. The oppression of the Palestinians is far more personal to the oppressed Americans than one might think. For almost two decades, the Israeli Defense Forces, which are routinely responsible for the unjust, extrajudicial murder of Palestinian parents, children, and community leaders have been training police officers in the United States. Chicago. Baltimore. Minneapolis. Cops in these cities, and many more, have been trained in quote, counter-terrorism measures such as placing their knee on someone's neck, and releasing their body weight on it. The struggle of those fighting for justice for George Floyd, Breonna Taylor, Elijah McClain, Rayshard Brooks, and that of our Palestinian siblings are invariably connected. Repeat after me: solidarity with Palestine.

Although we are correct to express the urgency and the importance of Black liberation as a moral and political imperative, we must also believe that no one is free until everyone is free. That includes our beleaguered comrades in Yemen, in the Democratic Republic of the Congo and other former colonies on the African continent, whose natural resources are being extracted for little in return by American corporations such as Apple, and Microsoft; in Latin America, whose civilians regularly suffer from reactionary politics and economic austerity of leaders installed by the US government; in India, Jammu and Kashmir, when the fascist Prime Minister Narendra Modi is being sold

billions of dollars in heavy military equipment while his administration enforces the systemic oppression of Indian Muslims and oversees the longest internet blackout in human history over the denizens of Kashmir; in the indigenous nations of North America, whose land is currently exploited and destroyed by the US settler state, and as a result, are 5 times more likely to die of infectious diseases than any other group, 3 times more likely than whites to be killed in a police encounter, and are 10 times more likely to be murdered or kidnapped; in the Philippines, which is currently waging an active revolution, a people's war, against the reactionary government of Rodrigo Duterte. We extend solidarity with them.

Just as no lives matter until Black lives matter, no one is free until everyone is free. And I ask that if we are willing to chant "no justice, no peace" for our murdered Black siblings, we should be willing to do so for our colonized and exploited comrades around the world, who are victims of the United States empire as well. Defund and abolish the police and prison industrial complex, but also the military industrial complex and the state department.

We cannot divorce the struggles of our communities here at home from the struggle of victims of US imperialism and colonialism around the world, because as soon as we do we allow those institutions to continue their cancerous spread. We allow those capitalist parasites who pull the strings on our government and economy to fatten their pockets on the bodies of the people of the global south. We must show solidarity with, and advocate for the liberation of, Black and brown people in the US, as well as the liberation of those in Latin America, Asia, West Asia, and elsewhere. When we do that, when we connect our arms in opposition to a global economic and military hegemony that has been a bastion of death, exploitation, and suffering in the favor of a system of solidarity and equality, we become that much closer to real freedom, not just the cheap imitation of freedoms enshrined in the US constitution, for all. We must keep those arms linked until reparations are paid to those whose labor and lives were stolen, until land and sovereignty is returned to its indigenous stewards, until we are no longer killing our environment with constant production, extraction, pollution, until the global economy is controlled by the masses who create objects of value, instead of the few who own and steal that value, and we must keep our arms linked forever more— for a future of freedom and equality for all isn't gained

"Just as no lives matter until Black lives matter, no one is free until everyone is free."

Revolutionary Poetry

Written by RAS Cadre

untitled

on the path the green on the trees hymning,
whispering that things will change change change
and it's so hard to hear them
it's hard to hear them over the rending
over the destruction of the crash

the cool bright air full of eyes unseen
sharp on the back of our neck
as every bit of life holds its breath
but the people walking past breathe on
unaware and senseless
in jogging suits at the end of the world

some uncanny birth leans forward
it's the tightness in your chest before laughter
you can't control, and it's all around us
in the springy earth and the springcold
and the rabbit in the clover

and i cannot be lost
because it is new, all new
there is nowhere to go
and things have lost their names
so i cannot be lost

through competition, separation, and resentment, but through solidarity, unity, and empathy.

I ask that you repeat after me:

NO LIVES MATTER UNTIL BLACK LIVES MATTER
AND NO ONE IS FREE UNTIL WE ARE ALL FREE
DEFUND AND ABOLISH ICE THE POLICE AND THE PRISON-INDUSTRIAL COMPLEX.

Speaker 3

"You show me a capitalist, I'll show you a bloodsucker."

These were the words of Malcolm X on December 20, 1964. They were true then. They're true today. They were true when the first English colonists settled illegally in what they called Virginia.

A few days ago, the descendants of those white settlers celebrated the two-hundred forty-forth year of this illegitimate settler-colony, the country they call "the United States of America."

On Saturday, the capitalists who own the United States told you to give thanks for your freedom. They shot off fireworks and held parades while tens of thousands of people die of COVID-19, while their hired guns commit murder in the streets. And they want you to say "God bless America!"

This is the capitalist idea of freedom: the freedom to die by a cop's gun, the freedom to die from the plague, and the freedom to die of starvation.

The state is the tool of the big capitalists. But what makes up this state? The courts, the stock exchange, the banks, the army, the navy and air force, and the police. These forces are bought and paid for by the capitalists to protect their precious property, to protect their precious profits.

And now, these vicious killer cops, the bodyguards of the big capitalists, have unleashed a spree of violence and murder across the country. Since the beginning of the June Uprising, they have killed three people a day on average. There have been five lynchings since May. Two days ago, the police in Seattle let a driver onto the highway past their barricade to run down a protestor. God bless America.

There are people right now asking, "How did it get so bad?" Some of them are saying, "It wasn't always like this. We just need to vote for the right people, force the politicians to fix the laws, or to enforce them. If we get the right people in office, everything can get back to normal; the killing and the brutality will stop."

Vote and we can fix things? The right person in the right place will end all this terrorism? Which candidate will abolish the police?

No. Those people are wrong.

They assume there's some flaw in the system, some gap that we never got around to mending. That's not true. The capitalist state is functioning exactly as it was intended to. It's not a mistake that the police commit open, cold-blooded murder in our streets. You can't fix something that was designed that way. The problem isn't on the surface. It runs foundation-deep.

The people who founded this country wanted it this way.

So of course they don't teach you the history of the U.S. genocides in school. They don't want you to know!

They call this the land of the free. Who is free? The white capitalist. The white industrialist. The white slaver.

The capitalists running this country tell this lie over and over: people came to the New World to be free. The settlers didn't come here to be free. They came here to make wealth. No one, not one person, came here looking for freedom, except the freedom to kill and plunder indiscriminately.

Yet this myth persists, despite everyone knowing, deep down, it's all bullshit the settlers made up to make themselves feel better.

The capitalists and their agents tell us that Turtle Island, which is what the indigenous people called our continent long before we arrived, was a wilderness. Think about that for a minute. They want us to believe it was a vast primeval wilderness with no one living in it, ripe to be "discovered," to be "explored," to be "settled."

They force teachers to repeat that lie so we grow up thinking its true. But listen.

There were five hundred and sixty-two native nations here when the European settlers came. The only wilderness was the wilderness they made by killing so many indigenous people with bullets and biological warfare. There were ten million natives in North America when the settlers came.

Where are those millions now? By 1900 there were only 300,000 left. The settlers had killed 29 of every 30 of the people who lived here. Think about that for a minute. Look around you.

For ever thirty people you see, imagine only one left. Now think of everyone you know, every one you see on the news every day. For every thirty of them, only one remains. This is the land they taught you was "wild" and "unsettled."

This was the settler genocide that gave birth to this country.

Those settlers built their state to steal land and grab wealth. The arms

of their state serve that purpose. The police, the courts, even the electoral system, all work together to safeguard their stolen plunder.

The police must be abolished.

It didn't end there, of course. Almost immediately, settler society met with capitalism's darling: slavery.

The capitalists that rule over this stolen, blood-soaked wealth tell you to celebrate your freedom, but how can you? That's why they hide the truth about slavery as best they can. They call it "the peculiar institution," and even claim it wasn't profitable. Do we believe that? African slaves built the foundations of New York City under the Dutch lash. In school they tell you that slavery was only in the south, the private privilege of a few great and powerful planters who have long since died.

Meanwhile, in New England, Northerners had native slaves they called "servants." In the South, poor white farmers rented slaves. They dreamed of making it big and owning them outright. It wasn't just rich Southerners. Every white person alive in this country today benefits from the system of racial slavery that stretched from the Thirteen Colonies to Florida.

The slave trade didn't just make planters rich. They want you to forget; they want you to hate the South but love the abolitionist North.

Was there ever such a place? The profits from the slave trade flowed into Boston and Newport. Boston slave merchants were wealthy men! Do you remember the Amistad? That was a slave ship.

There's a reproduction of the Amistad that sails around Long Island Sound, from New Haven to Boston. Don't you think there's a reason it docks here? These are her home waters; the waters of the slave trade.

What did they call buying and selling slaves, those clever white men, the founders of the United States? They called it the triangle trade.

The corners of the triangle were Boston and Newport, where the ships were loaded with rum; The Ivory Coast, where puppet-kings were propped up by slavers, that was where the rum was sold and slaves were taken on board, crammed into the holds; and lastly the Caribbean where the slaves were offloaded and exchanged for molasses or sugar, which was taken to New England and turned into rum so the whole evil triangle could begin again.

The southern slavers bought their slaves through this same triangle. One united settler-colony, engaged in a unified system of exploitation, genocide, slavery, and murder. God bless America! Happy Fourth of July!

"Rotten to the foundation, from slave catchers to cops, this is the origin of policing in the United States: these are its evil roots!"

But wait, they remind us, there was this big war! There was this whole movement to abolish slavery in this country! I don't have to worry, because men died to eliminate this hideous evil, this national blight that built so much wealth.

Bullshit.

First of all, the wealth is still there. You know who the first President of this country was? Washington, a slave owner. How about the third? Jefferson, the man who so loved his slaves that he wrote about how evil slavery was, even while increasing the number on his plantations and raping his twelve-year-old housemaids.

Where did that wealth go? Do you think it vanished? Do you think it was given to the descendants of the slaves, the people who had been whipped and clubbed to produce it? No! Jefferson built himself a Greek palace.

There's a reason all the public buildings in this country look like they fell straight out of a white-washed Rome.

Slavers know slavers.

And sure, there was a war. But make no mistake, the historical record is clear: the war was between the industrial capitalists in the north and the agricultural capitalists in the south. It was also between the white workers in the north and the white farmers in the south. The war was a war for production.

White northern workers were afraid of being driven out of their jobs by enslaved African labor. White northern industrialists wanted to preserve their factory system. The only way they could do that was to go to war. The Confederacy could never win. The southern economy was built on slavery. Just beneath that thin layer of white settlers, was a huge mass of enslaved people, ready for revolt. The U.S. government used that to their advantage: the slaves were freed as part of a military strategy to overthrow secessionists, not as some just and noble cause.

And what happened to the slave patrols, the ones made of white men with guns, clubs, and knives, who crept through the fields and watched the slaves to make sure they weren't going to revolt? What happened to them when the Civil War had run its course? They became the first American police. Rotten to the foundation,

from slave catchers to cops, this is the origin of policing in the United States: these are its evil roots!

Abolish the police!

And what happened to slavery when the Civil War was over? They tell you in school that slavery ended in the United States, but that's another settler lie. Slavery was never abolished in the United States! How many are surprised to hear that? But it's true! Slavery was never abolished— it was restricted.

What does that mean, it was restricted? The 13th Amendment was the first of three Reconstruction Amendments that the Southern States were forced to ratify to rejoin the Union. The 14th Amendment established equal protection under the law. Equal protection under the law, like the equal protection that strangled the life out of George Floyd and beat to death black men and women for generations before. The 15th Amendment made it unconstitutional to deny people the vote based on their race, but we all know they found a way around that one with racial gerrymandering and voter ID laws!

So what about the 13th Amendment, the one that they keep telling you "abolished" slavery?

This is what it says: "Neither slavery nor involuntary servitude except as a punishment for crime whereof the party shall have been duly convicted, shall exist within the United States".

We know what that means. It means convicts can still be slaves. Is it any wonder that the United States has imprisoned almost an entire percent of its population? Is it any wonder that one out of three black men spend time in prison? Is it any wonder that fully one quarter of the prison population of the planet is in the United States?

Chattel slavery was turned into judicial slavery; it's a magic trick that the capitalists with their for-profit prisons don't want you to see. The institution that literally built the White House is still the same. It never changed.

The United States was built by free labor, has always relied on free labor. And maybe that's what they mean when they say we should celebrate our freedom; maybe the capitalists mean we should celebrate the free, blood-drenched soil the settlers took from the natives. Maybe they mean the free labor they stole from the slaves. Or maybe they mean the freedom to imprison the colonized people still living inside the United States today and exploit them for their labor.

With so much profit at stake for so many powerful capitalist pigs, is it any wonder this country isn't really free?

Is it any wonder the cops and the courts lock up young black, latino, and colonized men at an incredible rate? This is how the system works. This is how settler-capitalism works.

Capitalism can't be fixed, because it was designed to do this. This isn't a few bad apples, this isn't one racist president, it's capitalism's very core, its central ideology: take as much as you can for as little as you can get away with. Capitalism is theft and slavery putting on airs, dressed up as philosophy. Capitalism can't be improved.

Of all the vicious tools of capitalist supremacy, the police are the most vicious.

Abolish the police! We should accept nothing less. The cops are the fist in the state's glove. Do not reform them! do not move some of their budget around to other places. Abolish them! We demand they be abolished! An end to a racist institution!

Now I'm going to give the mic over to the founder of the Black Revolutionary Collective, who organized this march.

Power to the people! No justice, no peace!

Report from the Ground— Texas and COVID-19

Written by RAS Cadre

The second wave of the coronavirus pandemic (a misnomer, given that the "first wave" never appreciably abated), has now fully taken the US in its deadly grip. Cases across the continent have skyrocketed, deaths continue to mount, and the bourgeois administrators who oversee this process have made the conscious decision to do as little about it as possible. Texas especially has become a recent epicenter of the pandemic. At the time of writing the state had surpassed 10,000 daily new cases with total confirmed infections now almost three times that of total cases in all of China. [1] The state government absolutely refuses to put into place effective containment measures, judging the prospect of further depleted profits to be more terrible than that of the steadily rising mountain of body bags. This isn't simply poor policy making; it is calculated serial murder.

A key part of the bourgeois narratives that have been circulating for months is that the virus isn't as dangerous as sensationalists have made it out to be. Every day, new data from around the world proves this a vicious lie. It is now known (and has been for some time) that the coronavirus attacks not just its victim's respiratory systems, but a whole host of vital bodily functions, and can cause permanent damage to those who survive it. In young people, the virus can

cause serious blood clots that may lead to strokes. It can attack victims' kidneys, potentially causing renal failure. [2] It attacks cardio functions, with one study finding that over half of its participants had suffered permanent, life altering heart damage. [3] Lung capacity for many survivors is reduced by over 30%, and even in a fully equipped ICU setting the process of intubation can damage the trachea, the thyroid gland, or the vocal chords, and can in some cases result in lung collapse. [4]

More Americans are now dead of the coronavirus than were killed in the First World War. Not only is the virus every bit as dangerous as it's been reported to be, in many ways it is more dangerous than is often understood. Any policy or narrative that dismisses this reality is by that fact alone a malicious attack on the working class.

OPEN UP (Your Economies)

The second wave's origins in Texas can be traced back to governor Greg Abbot's decision to prematurely open the state after the situation began to be untenable for the bourgeois class. Medical professionals, economic analysts, and most of the working class itself objected to the plan, seeing clearly that cases had not slowed enough to justify a full reopening. Nevertheless, in early May, Abbot dictated that the state was to end its already half-hearted lockdown. [5] Millions had already lost their jobs by that point, but for those who hadn't, the threat of eviction and starvation forced them back into workplaces that hadn't received any PPE or sanitation support from the government whatsoever. The cynicism of the ruling class was on full display. In March, Lt. Governor and millionaire, Dan Patrick, famously (or infamously) commented on national television that elderly citizens should be happy to die for the sake of the economy, cleverly leaving out that he and his family would be securely isolated from the havoc of a second wave. [6] The state Republican Party proudly and defiantly declared that they would be holding their in-person convention in Houston, a city that some project to be the worst hit in the country, surpassing even New York in cases and deaths. [7]

The workers of the state are now

1. https://www.npr.org/sections/coronavirus-live-updates/2020/07/07/888755062/texas-sets-state-record-with-more-than-10-000-new-coronavirus-cases-reported-tue
2. https://www.npr.org/sections/health-shots/2020/04/29/847917017/doctors-link-covid-19-to-potentially-deadly-blood-clots-and-strokes
3. https://www.newsweek.com/scans-reveal-heart-damage-over-half-covid-19-patients-study-1517293
4. https://www.businessinsider.com/coronavirus-recovery-damage-lung-function-gasping-air-hong-kong-doctors-2020-3?op=1
5. https://www.tpr.org/post/did-texas-reopen-too-soon
6. https://www.usatoday.com/story/news/nation/2020/03/24/covid-19-texas-official-suggests-elderly-willing-die-economy/2905990001/
7. https://www.kvue.com/article/news/health/coronavirus/texas-gop-republican-convention-houston-covid19/

suffering the consequences of those decisions. Healthcare systems are failing in major cities across Texas. In Houston, ICU capacity was quickly reached, then surge capacity was reached. [8] The beds are all full, and hospitals are unable to admit more patients. Between overcrowding and the astronomical cost of care, workers and the poor are discouraged from visiting the overloaded facilities except for the most dire emergencies, so that by the time they stagger in through the front doors, or are wheeled in by paramedics, there is often nothing the healthcare staff can do. In cases where the patient could otherwise have been saved by swift ICU intervention, they're informed that they'll have to stay in the poorly equipped ER bed until someone in the ICU either dies or is discharged. This has led to the ERs themselves being transformed into scenes of horror and confusion.

What is worse is the proliferation over the past decade of the parasitic, hyper-capitalist pop-up Emergency Room, which has significantly complicated care options. Today there are more than 200 stand-alone ERs across Texas, up from barely 25 just a decade ago. [9] These facilities are not equipped to handle any more serious condition than a minor broken bone or a minor fever. They are, however, billed as if they were fully equipped medical facilities, and they have become ubiquitous across Texas. For poorer communities that are less likely to have access to transportation, they are often seen as the only option for medical care, and they have seen an inevitable influx of patients with COVID-19 symptoms. Hospitals are required by federal law to take any patient that comes through their doors, or who was previously admitted to any ER. These laws extend to the pop-up ERs, but it is common practice to invent reasons not to accept those patients, especially if hospital resources are stretched or the patient lacks insurance coverage. As a result, many COVID-19 patients visiting the smaller pop-up Emergency Rooms will remain there in perpetuity while the staff tries in vain to transfer them to larger facilities that simply cannot and will not accept them.

The poorest neighborhoods, those plagued by poverty, police terror, and subject to colonial structures of white supremacy are disproportionately affected. They are the engines of the US Empire, the internal colonies from which the bourgeoisie extracts its super profits. These communities are overwhelmingly overrepresented among victims of the disease. Latinos in Texas are dying at a rate 2 to 2.5 times higher than the white population, and Black Texans are dying at a rate over 3 times higher. [10] Colonized communities are also by far the least likely to receive effective state aid, many exist in food deserts that force their inhabitants to travel far in search of nutritious food or supplies, and are occupied by militarized police forces. These factors reveal that the Texas government's slogan of "Get Texas Back To Work" is not only unconscionably callous, but it also represents a genocidal escalation in the campaign to bring order to the "unruly" oppressed masses. Since the battles of the June Uprising began, these policies have increasingly taken on the character of a punitive campaign.

None of these developments are accidental. They are all elements of a coordinated policy of value extraction that extends to all corners of society under capitalism. Every step and every decision represents an open-eyed and murderous policy of extraction perpetrated by the ruling class onto the workers and the oppressed. They will not stop, because they cannot stop. They sit on a mountain of stolen riches, and if they don't keep accumulating, if they don't continue to build that mountain higher and higher, no matter the cost, it'll all come crashing down. The developments of the past six months have rattled them. Lockdowns made it impossible for them to deny labor as the source of the value they horde, which has undercut the lies they tell themselves about their own importance. The June Uprising has reminded them that the subject nations of this empire are not slaves, that they are willing and able to grind this country to a halt to secure real freedom.

One might be tempted to look out at all the suffering they've caused this year and conclude that it means they are at the peak of their strength, but it doesn't mean that at all. It means that they're afraid.

Regarding Propaganda Surrounding COVID-19

Written by RAS Cadre

Regarding Propaganda Surrounding COVID-19, The Party for Reclamation and Survival takes the following stance:

COVID-19 is a medically serious

8. https://www.houstonchronicle.com/news/houston-texas/houston/article/Houston-hospitals-hit-100-base-ICU-capacity-15372256.php
9. https://altmanlegal.com/pop-up-ers/
10. https://www.ksat.com/news/local/2020/07/02/latino-black-people-dying-and-becoming-infected-with-covid-19-at-staggering-rates-data-shows/

condition and contraction of this virus could result in death. Already, 138,000 Americans have died as a result of contracting COVID-19. It is highly virulent, exhibiting a nationwide $R_{(t)}$ of 0.8 to 1.35. This indicates it is still rapidly spreading. It is transmitted by droplet, by aerosolization in confined spaces, and by physical touch.

There is now a current far-right talking point that has been adopted by right-wing communists and opportunists that indicates the virus is non-serious and that the real threat of COVID-19 is an economic one. The rightists deviation is unequivocally, undeniably, and absolutely false. **COVID-19 is a killer.**

The propaganda arises from the petite-bourgeoisie rightists and their adherents in labor who are calling for the US and UK economies to "return to work." These rightists correctly gauge COVID-19 to be a threat to their continued profits. To that end, they are prepared to sacrifice the working class on the blood soaked altar of profit. The deluded leftists who partake in this deviation are not champions of the working laborer who merely needs their daily bread. At best, they are misguided economists, at worst open reactionaries.

A centralized and coordinated lock down is the best way to prevent the spread of the disease and would be in the best interest of the working class, as evidenced by the actions taken by the People's Republic of China. Mainland China, widely considered to be the epicenter of the outbreak had, as of July 16, a total of 83,612 confirmed cases of COVID-19 (78,719 recovered,) but due to the mandatory lock down procedures initiated by the PRC, had only suffered 4,634 deaths.

The United States, on the other hand has a total of 3.53 million confirmed cases with 138,000 deaths. While there was some semblance of a lock down in April and May, it was not mandatory and by no means were those in quarantine afforded any sort of meaningful material help.

Instead of providing its citizens with safety measures, there has been a concerted effort to prematurely reopen public areas, private businesses, and schools. This decision by the government, both state and federal, is a clear statement that the profits of the ruling class are the priority and that the lives of United States citizens, especially those of colonized peoples within the imperial core, are inconsequential and worthless.

It is clear then, that an imposed quarantine would be in the best interest of the working class, but any sort of imposed quarantine by the United States will have a distinctly different character than one imposed by the PRC. While a lockdown demanded by the working class would be desirable, the United States will invariably attempt to turn such a lockdown against the people, and constant vigilance will be required.

The deviationists claim the disease is not major and the lock downs are a strategy of the bourgeoisie to consolidate power and further eviscerate the working class. This must be addressed correctly. Any lock down or work-stoppage will bear the class-character of the class that enacts it.

If the capitalists, therefore, **choose** a lock down, it will be one that creates havoc among the working classes and lower strata of the petite-bourgeoisie. A capitalist lockdown will provide minimal or no aid to the poor, minimal or no rent relief, minimal or no medical support. However, if a lock down were **demanded** by the active working class, **pressured** into being by action **from the people,** it would bear a proletarian class character.

The Party for Reclamation and Survival calls for the mobilization of the people: closure of all schools and public places; absolute rent relief for all renters, food distribution, expansion of medical services, and the institution of financial relief to all families making less than $100,000 per year for the duration of the crisis.

Along the same lines, the Party for Reclamation and Survival hereby **denounces** the right deviation stating that COVID-19 is a capitalist hoax and all fair-weather friends of the working class, economists, opportunists, and reactionaries who endorse such a line. It is **deadly** to the **proletariat** to hold such views, and those who do so should be condemned as enemies of the class.

There is no National Revolutionary Party in the Empire

Written by RAS Cadre

Where is the revolution?

The revolution is in the streets, claiming territory block by block. It is evolving from a protest, to an insurrection, to an uprising against the white supremacist settler-state. Point to a major city in the US Empire; *there* is the revolution!

Where is the unified national revolutionary party?

Dead. The opportunists killed it. White supremacy has crept through it and divided it. The old parties of the past aren't fit to lead any longer, if they ever even were.

Time and again, the potential for revolution in the core of the United States Empire has been squandered by blind, parasitic opportunists, who take every chance to speak out against fascism in order to beg support for legislative reforms. Time and again, these opportunists have put their efforts into participation with the systems of control and oppression operated by a monstrous government whose laws are either openly regressive, or labyrinths of double-talk and empty promises.

Time and again, the colonized masses win in the street only to have their victories robbed by a "leadership" that has neither the will nor the power to see the fight through.

Always, the "revolutionary" parties claim victory when law and policy is implemented, when nothing has changed on the ground. How many "victories" have we communists won in state houses across the country? How much closer have these reforms brought us to the revolution?

The old "revolutionary" parties have *always* embraced Amerika. Their programs, their goals, their very essence is to reform the United States settler-empire into a "Socialist" settler-state. There will never be a USSA, a "United Socialist States of Amerika," because the United States is, from its very foundation, incompatible with socialism. The United States is founded on colonization, genocide, slavery, and capitalism. It is a system designed to perpetuate oppression, and such oppression cannot be reformed or modified into a system of liberation.

The United States must be swept away if Socialism is to prevail.

That is why the Party for Reclamation and Survival rejects reformism, and that is why we reject the long history of the leadership of the CPUSA and its treachery. From the time of the Depression onward, the CPUSA has aligned with Amerika.

When the opportunity to destroy the US war machine waited at their doorstep on the eve of the second World War, they instead fought for the "New Deal," the very reform that saved it. When the potential for unified action between the colonized proletariat and the white proletariat was within their reach, they refused to stand for black wages and black jobs and instead allowed the colonized peoples of the United States to be driven out of the factories.

There *are* revolutionary formations inside the settler-empire. They are small and isolated, prepared to resist the agents of imperial suppression. We have merely to look at the history of the repression of *real revolutionary communists* to know that the public "communist" parties of the United States represent no threat to the capitalist order.

Remember: Fred Hampton was shot to death in his bed by the police. The Black Panther Party was forcibly liquidated by the capitalist intelligence services; hammered, over and over, with trumped up or completely invented charges, hounded from the country, shot, beaten, struck in car accidents, or poisoned with drugs until they could no longer fight. The US Empire knows an enemy when it sees one; it knows that real communists are its mortal enemy, and it hounds them until they die.

The US Empire does not tolerate socialists. Kwame Nkrumah's government was overthrown by the CIA. Patrice Lumumba was assassinated by Western capitalist intelligence agents. Indeed, every communist and socialist who has ever attempted to destroy bourgeois power has been attacked by all the forces reaction could muster. The Bolsheviks suffered severe repressions, repeated exiles and imprisonments, even death at the hands of Minister Stolypin. The Communist Party of China was massacred by the Nationalists and fought a long war and a long march against them. German Communists suffered almost total liquidation and death struggling against the fascists. The Italians lost 60,000 communists in their partisan struggle.

The CPUSA and the other public "revolutionary" communist parties of the USA. have never suffered such repressions. At the height of the Red Scare, Julius and Ethel Rosenberg were executed for the crime of espionage and passing atomic secrets to the USSR, but most CPUSA members suffered nothing more serious than a loss of prestige and work opportunities which they soon regained when the House Un-American Activities Committee disbanded. Throughout all of this, of course, the United States was murdering and enslaving its colonized people, first through legalized work and wage discrimination and later through the legal enslavement of black and brown "criminals."

At the height of the Red Scare repressions, the CPUSA suffered 160 arrests, with 114 convictions. The CPUSA was not the target of the Red Scare because the "communism" it represented was not a threat to the capitalist order. Joseph McCarthy wanted to purge the US government of semi-radicals, and the toothless radicalism of the CPUSA provided him with a boogeyman with which he could inspire fear and drum up the support of reactionaries. Meanwhile, the American Indian Movement at *Pine Ridge alone* suffered 90 killed and 200 imprisoned.

The CPUSA is not interested in revolution, nor are the other "communists" who claim to have been building revolutions in the West for a century.

At its height, the CPUSA numbered close to 100,000 members. In 1944-45, it led one quarter of the CIO industrial unions. During the period of 1937-40, the chief executive officer of the National Labor Relations Board was a CPUSA member. And yet, between 1939 and 1942, members from the steel mills fell from 2,000 to 852. Miners fell from 1,300 to 289. Petit-bourgeois membership surged from 5% in 1932 to 41% by 1938. Whatever force the CPUSA had was given by the strength of the early 20th century European proletariat that abandoned it in droves as it failed to secure any real victories for communism during the late '30s.

"All this power in 1937-39, and the CPUSA's most "radical" strategy was to unite with the U.S. government to support President Roosevelt and his New Deal."

All this power in 1937-39, and the CPUSA's most "radical" strategy was to unite with the US government to support President Roosevelt and his New Deal. This, during a time when the very structure of western capital was in danger. Did the CPUSA push for revolution? Did its leadership make use of the radical base? No, they advocated for reform. They warned that communists, (*communists!*) should join to defend their oppressive capitalist government, because it was better than fascism.

Today, the CPUSA openly calls for "revolutionary patriotism." The battlecry of its leadership is to "complete the revolution" —apparently linking the inter-imperialist feud of the US War for Independence with a true proletarian revolution. We know that the US itself is poison, that the War for Independence was but one stage in a long story of planter bourgeoisie seeking a freer hand to commit genocide across the continent and to enslave whole nations.

The CPUSA leadership does not care. They have no theoretical basis save for opportunism. Their strategy is union with US capitalism, particularly its left wing. **Social-democracy is objectively the moderate wing of fascism.** During the 2016 and 2020 presidential campaigns, CPUSA members worked wholeheartedly for Bernie Sanders. In 2020 the official party position is to work for and support Joseph Biden, a noxious racist, an avowed capitalist, and a decaying corpse, for president of the settler-colony. The CPUSA leadership does not want communism. They want a softer capitalism for their constituency.

This is the constant cry of the CPUSA, and it is no different from the frantic imperialists of the Democratic party. When the CPUSA abandoned its principles in favor of supporting the US Empire in the 30s and 40s, they did so to support the New Deal. Now, in 2020, there is talk of a "Green New Deal," and, like its namesake, what it proposes does nothing to attack the structural abuses of capitalism.

When the CPUSA asked its members to support the US Empire because it was "better than fascism" in the 30s and 40s, they failed to recognize that the United States is and always has been the model for fascism. Now, in 2020, fascism continues to rise, and once again the left is being asked whether uniting with the liberal capitalists who have built a system of slavery and oppression for generations is not better, is not worth fighting for, if fascism is the alternative.

But there *is* another alternative; an alternative worth fighting for—real socialism!

"The role of vanguard fighter can be fulfilled only by a party that is guided by the most advanced theory." What theory guides the CPUSA and the other opportunist and chauvinist parties? If at all, it is a simple mechanical determinism, a faith in spontaneity that the revolution will "make itself" if only we are patient. For we do not see them working to make the revolution! The very opposite—they strive, with every effort they can muster, to delay it. They have deceitfully called this harm reduction, as though delaying the death of the jailer brings the prisoner some reduction in the punishments inflicted on him out of goodwill.

Given the history of the CPUSA and the other compromised parties speaking with the words of the Democratic establishment, how can we trust them to organize for the revolution today? Given the long history of capitulation to the systems of oppression in the United States, *what makes these parties communist?*

It is the stated position of the CPUSA, as of July 22nd of this year, that the revolutionary struggle is to be waged *in a popular front* with Democrats. "[V]oting to end Trump, electing people's candidates to city councils, state legislatures, public school boards, and Congress" takes pride of place in their strategy to a vague commitment to "radical alternatives and movements." These are

not the words of a communist. These are the words of a sheepdog, designed to kill revolution.

The CPUSA is not alone. Other major parties in the United States are either inept or unserious. Many continue to post photographs of protestors and have openly refused to blur the faces of those in their publicity photographs. This opportunism was exposed on June 27 of this year when President Trump began posting photographs of the protestors on wanted posters, asking the white supremacist paramilitary for assistance in identifying and prosecuting or killing them.

Although leadership in these parties has been compromised, there are still good, principled comrades in these organizations. However, they are swamped, outnumbered, and outvoted by a great sea of chauvinists who see the advance of communism as a way to win piecemeal reforms for workers and who constantly wave the threat of fascist consolidation over the masses as the reason why "just for now" we must engage with the repressive settler-state and make a deal.

Those comrades must leave the CPUSA and its fellow opportunists There is no longer time to wage a purgative struggle within these essentially bankrupt institutions.

There are organizations in the US that are seeking its dismantlement and its overthrow. There are people working day and night to unmake the monstrous beast that is the United States. Those people need your aid! They are, for the most part, still local. These local organizations are wholeheartedly devoted to the liberation of the oppressed but as yet lack any national structure. Principled communists must reach out to build bridges with those who also seek the complete destruction of the US settler-state.

Indeed, while the CPUSA and the other chauvinist, opportunist, revisionist, or outright reformist parties are corrupt at their national level, they maintain many local cadres who are doing good work. There are those doing the real, material work of revolution: the important, material aid and the building of dual power. Toothless marches and the pursuit of ludicrous presidential candidates or, worse, union with the Democrats, *is not revolutionary work.* The real work performed by well-intended chapters of the CPUSA (and its fellow opportunists) is wasted where they are directed by the treachery of their unsteady leadership away from cause of the oppressed nations.

What is patriotic socialism, when the patriot is in the heart of the empire? Nothing more than a form of social-chauvinism, the corruption of socialism to its very roots. Socialism is international, or it is nothing! The socialists of the imperial core should stand against their own government. There is no place to support the empire for a socialist or a communist. To claim otherwise is to descend to the basest opportunism, to attempt to draw from the well of ancient settler lore, and to abandon the class struggle where it is at its sharpest, clearest, and most desperate.

There is no need to work within the dead or dying parties. Cast them off! It is the rank and file comrades of these parties in whom the true potential resides. There is no need to be tied to these moribund counterrevolutionary currents.

Even as the June Uprising occurs around them, these organizations act and speak as if revolution is impossible, will never occur, and the system of US domination will last forever.

The revolution is being born all around you. Can you sit back and dither with the very men and women who would smother it in its sleep? No. You must advance, unite with the revolutionaries, and **march to victory!**

Decolonanization is Material Action.

Written by RAS Cadre

Today, Marxist-Leninists, and all left wing movements that seek to challenge US state power, should aim for an intersectional and inclusive approach to philosophy and modern praxis. While there is plenty of discourse and education available on feminism, ability and access, LGBTQ+, and Black movements for equality, by the nature of the US settler-colonial state and genocide of the indigenous people that discourse is intentionally obfuscated on the subject of decolonization. Further obscuring access to this information is the trend of "decolonization" as a metaphor rather than the material decolonization and repatriation of what was stolen from the Native peoples and the alleviation of the manifold impacts of colonization. Decolonization is actually a more straightforward concept than it appears in the fluff of social programs cloaked in the vocabulary of justice. For example, "decolonizing our schools!" and "decolonizing student thinking!" often does not represent a material approach to decolonization, but instead refers to an attempt to enforce and reinforce white settler-colonial ideas for improving our schools, while continuing to harm Native people and erasing Native culture. This performative display of faux-decolonization ultimately only props up colonial and white supremacist institutions. What "decolonizing schools" actually looks

like is the returning of indigenous sovereignty over how their children are educated—full stop. Since settler-colonialism has shaped US schools in every respect, no amount of re-programming or curricula changes will correct that.

The key to decolonization is simple: all land must be repatriated, and all projects of resource extraction must be given to the indigenous governments that come to power for a final veto. This is not symbolic. This is not financial awards from the U.S. Courts. This is not diverting to Natives a minor percentage of profits from the commercial icons built on the stolen land. All measures short of the repatriation of land back to indigenous people are simply settler harm reduction and are not decolonization. Certainly harm reduction matters, but it is not decolonization. Decolonization can only be the explicit returning of sovereignty and rights to those from whom it was violently stolen.

The questions we must answer and contend with following the successful dismantling of the settler-colonial state begin with being challenged in our own contemporary track to liberation—all steps toward the liberation of the working class on this land are steps on stolen land and on an array of brutalized peoples. The perpetuation of this genocide is the very essence of the United States. Our pursuit of worker rights in this settler-colonial context may be anti-capitalist, but it is at its core pro-colonial when pursued on stolen and blood-soaked land. We can, and must, choose to decolonize and to resist engaging in a re-occupation by the socialist governments that replace the current ones.

Further we are challenged as Marxist-Leninists in our shared view with capitalists of "natural resources"—land and all wealth extracted from it—as commodities for exploitation. Capitalists exploit these things for personal gain, communists for the good of all (Sandy Grande, 2004). The land is the wealth, and all material wealth on this continent derives from the land; all of the things we call natural resources are all things Native. The land was and is the source of capital. To continue to reinforce the separation of Native peoples from their land is to repeat the ongoing violence and genocide that is inherent to the structure of the current system.

The capitalist state is a tool of colonialism, and to truly achieve a decolonized anti-capitalist future it is imperative to consider and plan for ways through which to not further these colonial projects. It is a challenge because, ultimately within full decolonization (in which the land and its resources are repatriated to the indigenous people) it is easy to assume there would be no wealth left to distribute, if we are accustomed to land being equivocated to wealth. This requires a conscious and intentional change from how we have been socialized to view this land, and how settler colonial culture links land to material wealth.

We are limited in our solidarity with our Indigenous comrades if we merely recognize stolen land and how it benefits settlers, but fail to consider relinquishing settler property rights. We must instead abolish land as property all together. Decolonization is not a mental exercise, it is not policies of land reform, or pseudo-progressive social justice programs. Decolonization is material action, and as such may make lasting solidarity with our colonized comrades impossible if it cannot be reconciled as a part of the proletarian revolution.

Material decolonization is a dialogical process between the formerly colonized nations and the newly liberated proletariat. To "decolonize" means not only the vague and undefined concept of returning sovereignty, but to accomplish the following material goals:

1) the end of capitalist property-relations over land—that is, no individual may own land or treat it as their exclusive preserve;

2) the establishment of special organs of government for the formerly colonized nations that carry out their will, and counter-balance the organs of the newly liberated settler proletariat; these may take the form of special councils, nationality tribunals, or national representatives. In any case, the representation of the formerly colonized at all levels of government during the period of socialist construction that would permit them a material measure of self-determination;

3) absolute veto-power over the use of land to reside in the formerly colonized nations, even during the period of socialist construction;

4) preservation of the formerly colonized nations' culture to be guaranteed by the interim state;

5) full control over the formerly colonized nations' education, culture, etc. to reside in their own self-governing organs;

and

6) change in the consumer culture to be accomplished by the elimination of extractive and destructive industry throughout society.

Of course, as we mentioned, this is a dialogical process—it can only be completed through dialogue. Thus,

Tuck, Eve & Yang, K. W., "Decolonization is not a metaphor." Decolonization: Indigeneity, Education, and Society. Vol. 1, 2012.

the goals and tools used to reach them must be worked out as the revolution occurs. The currently oppressed and colonized nations, not only the indigenous nations of the Americas but as well as the New Afrikan nation and all colonized peoples in the empire, will help determine the best shape for a decolonized future.

Party for Reclamation and Survival, Educational Philosophy

Written by RAS Cadre

The Party School for Reclamation and Survival is unlike any school that exists in the United States of America. It is not a liberal institution of learning, and it takes its approach from an acknowledgment that everyone who attends will have been subjected to more than a decade of liberal schooling, and more than a decade of concerted anti-communist propaganda, as well as propaganda designed to undermine our learners' understanding of what learning is, and how it is possible, especially in the human sciences.

Learning in the "humanities"—for example, the University disciplines of English, Philosophy, and History—has been thoroughly and effectively destroyed in the United States. If you ask someone why we should learn literature, art, or philosophy, you will invariably get one of two kinds of answers. Either we should learn these things for a kind of cultural enrichment; or we should learn these things to increase some nebulously defined "critical thinking skills."

It has become a commonplace by now that the "Western canon," i.e. those pieces of media that are approved as part of the cultural enrichment project of the state, are extraordinarily biased. They are not only patriarchal and racist in their composition (being essentially a collection of white men), but they are also selected for their support of capitalism. Although we might object that socialists like John Steinbeck have been included in this canon, and that increasingly radical Black thinkers like W.E.B. DuBois have found their way into this canon, it is noteworthy that few Americans who know the name Steinbeck or DuBois know that these men were socialists and communists. The "cultural enrichment" project of the study of the humanities in the United States is really a project of indoctrination into capitalist ideology. Inclusion in the canon is based on either an artist or thinker's commitment to liberal capitalism, or because the artist or thinker has become so influential that it is no longer possible to ignore them, so they must be included in order for their anti-capitalist writing to be sanitized and contained within a controlled context.

As to the notion of "critical thinking" skills, the best research into education and reasoning suggests that there is no such thing as a vague, generalizable set of critical thinking skills which can be taught or applied to any scenario. While this may run

THE PARTY FOR RECLAMATION AND SURVIVAL IS EXCITED TO ANNOUNCE OUR INTRO TO DIALECTICS COURSE WILL BE OPEN TO THE PUBLIC BEGINNING IN EARLY SEPTEMBER.

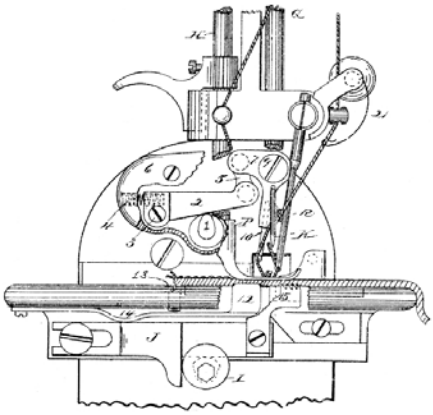

Understanding the machinery of history is the first step for any revolution. Join the RAS in demystifying the processes by which history advances this September! Registration will begin mid-August.

***"Without revolutionary theory there can be no revolutionary movement."* -Lenin**

If you have any questions regarding registration or other matters please contact us at reclamation.and.survival@protonmail.com

counter to our intuitions—we have all observed people we thought were exceptionally sharp, and who picked up new complex ideas quickly and effectively—this is the result of something that educational researchers call transfer. When we learn and apply the skills required to do one task, we can begin to transfer those skills in novel ways to new tasks. As we learn how to do more and more kinds of things, we have at our disposal an increasingly diverse set of skills that can be transferred effectively to more and more novel situations. Transfer and imagination are at the core of what the reactionary education system describes as critical thinking, IQ, and creativity. There is not one generalizable "intelligence" muscle. Instead, there is a capacity to apply many specific things that we have learned how to effectively do, to new and different situations. The vague notion of "critical thinking" works counter to our ability to acquire creativity and transfer because it focuses our attention on working and flexing some generalized "intelligence" muscle that does not exist, when we should instead be trying to learn how to do specific things.

And this is at the core of the Party School's approach to learning. We are learning how to do specific things. We are not learning about things for our edification and enrichment. We are not learning how to think in some vague, normalized way. We are learning how to do things.

Notice that when you ask someone what the humanities are for, the answers have no clear application. We do not say that we learn literature in order to write literature that has a clear impact on people's behavior. Fundamentally, good literature impacts the behavior of people both individually and en masse, but that is not why we learn literature. Apparently it is simply so that we can "appreciate it." But what does that mean? Does appreciating the works of Steinbeck or DuBois mean that we then commit ourselves to the destruction of capitalism, as their works exhort us to do? No. It apparently means that we each, individually, feel moved by their works. Perhaps we cry. Perhaps we write something in our journal. Perhaps we hang up a picture of the author.

Similarly, when you ask someone what philosophy is for, no one will tell you "revolution," despite the fact that philosophical works have been deeply involved in every major political change that has occurred. We are told instead that philosophy makes you a better critical thinker. To the extent that we apply it to politics at all, it is suggested that you can think philosophically to analyze the content of a particular piece of legislation, or the platform of a politician. Seeing through the contradictions, lies, or inconsistencies in the subject of your analysis, you can expose those problems via conversation and public debate. But of course, this doesn't change anything. The proposed law will be passed whether citizens see through it individually or collectively, and the American populations' capacity to see through the lies and contradictions of the political platform of elected officials has not held those running for office to a higher standard. If anything, our laws and elected officials have become more brazen in their lies over the last half-century.

The Party School is approaching this in a wholly different way. We study media in order to produce media that will organize and coordinate human activity towards an intended end. We study philosophy in order to develop institutional structures and codes that will organize and coordinate human activity towards an intended end. All of our courses have clearly stated objectives that have clear and essential applications. There will be no vague hand-waving about individualist edification or vague gestures towards imagined generalized improvements in individuals. Together, we will make a new form of education. Together, we will liberate one another. Together, we will learn how to organize our activity to remake the world. This is the work, and it is critical.

—Solidarity, Comrades.

The capitalists are throwing away food that could end the hunger they create. END capitalism. END hunger. JOIN RAS.
Contact reclamation.and.survival@protonmail.com